Penalty-free error-free all-optical data pulse regeneration at 84 Gbps with Symmetric-Mach-Zehnder-type regenerator

Yoshiyasu Ueno, Shigeru Nakamura, and Kazuhito Tajima
Photonic and Wireless Devices Research Laboratories, NEC Corporation
Miyukigaoka 34, Tsukuba, Ibaraki 305-8501, Japan
y-ueno@cb.jp.nec.com

Abstract: We have achieved penalty-free data pulse regeneration at 84 Gbps down to an error rate level of 10^{-11} with a pseudorandom data pattern length of 2^{31}-1. An all-optical interferometric semiconductor regenerator was used.

OCIS codes: (320.7080) Ultrafast devices; (060.4510) Optical communications

1. Introduction

The ultrafast optical-time-division-multiplexing (OTDM) technology whose bandwidth is not limited by those of electronic devices is attractive because it leads to more flexible packet networks. Several types of all-optical functions, such as demultiplexers [1-4], wavelength convertors [5-8], and 3R regenerators [8-10], have been proposed and demonstrated. All of the devices in these reports are based on the Symmetric-Mach-Zehnder (SMZ)-type interferometric semiconductor switch structure and its mechanism [1], which enables those devices to form a rectangular-like switch window with an ultrafast response time (rise and fall times). The response time is not limited by the slow semiconductor carrier lifetime because of the interference cancels out carrier-recovery-induced components. Error-free demultiplexing from 168 Gbps to 10.5 Gbps was successfully demonstrated [4].

For 3R-renegerating or wavelength-converting OTDM data pulses, not only the impact response but also the device's repetition rate must be ultrafast. In addition, the devices must follow input data patterns. To date, the SMZ mechanism has been proved to work at repetition rates up to 168-Gbps [6-8], where a switch window width of 1.5 ps was observed. The input-data-pattern-induced effect is suppressed either by the input clock pulses [9] or by the input continuous-wave light.

The 3R regeneration (re-amplifying, re-shaping, and re-timing) is a function important for OTDM systems because of their shorter time frame and the larger pulse-quality degradation due to the nonlinear effects in silica fibers. Recently, all-optical 3R regeneration at up to 84 Gbps has been demonstrated [8, 10], where the regenerators exhibited power penalties of 3-4 dB. In this work, we report penalty-free 84-Gbps 3R regeneration down to an error rate of 10^{-11} using a pseudorandom word length of 2^{31}-1.

2. Device structure

Figure 1(a) shows a schematic structure of the symmetric-Mach-Zehnder (SMZ)-type 3R regenerator. Only the input scheme is different but the structure is exactly the same as the SMZ demultiplexer [1, 4] shown in Fig. 1(b). Each time a data pulse triggers the regenerator, the regenerator all-optically forms a rectangular switch window and passes a co-propagating clock pulse that coincides the window, as shown in Fig. 2. Thus, input data pulses are replaced with re-timed clean data pulses.

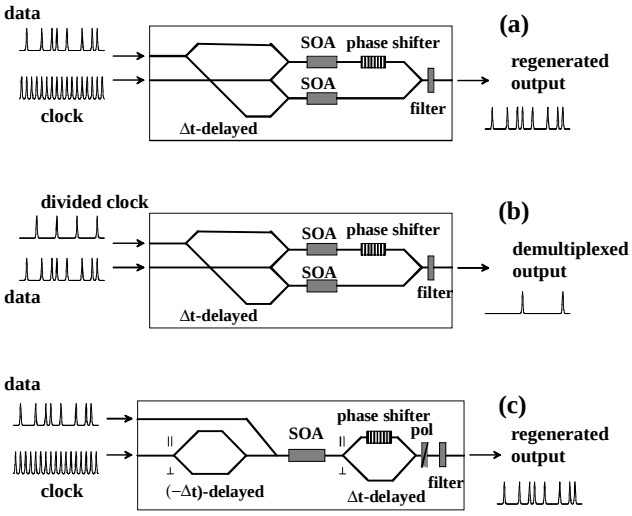

Fig. 1. SMZ-type all-optical device structures
(a) 3R regenerator with SMZ structure
(b) demultiplexer with SMZ structure
(c) 3R regenerator with PD-SMZ structure

In this work, we used an optional SMZ structure, that is, a polarization-descrimination SMZ (PD-SMZ) structure [2, 3, 8, 10] in Fig. 1(c). This structure is stable and needs only one semiconductor optical amplifier (SOA). The SMZ mechanizm works for this device, as well [2]. A polarization-insensitive high-gain bulk-active-layer SOA was used with an injection current of 250 mA. The two polarization-split Mach-Zehnder interferometers were built using calcite crystals. The birefringency of the two calcite crystals (6.2 ps) determined the width of the rectangular switch window. A Babinet-Soleil phase shifter was inserted into the second interferometer for adjusting the phase bias of the interference.

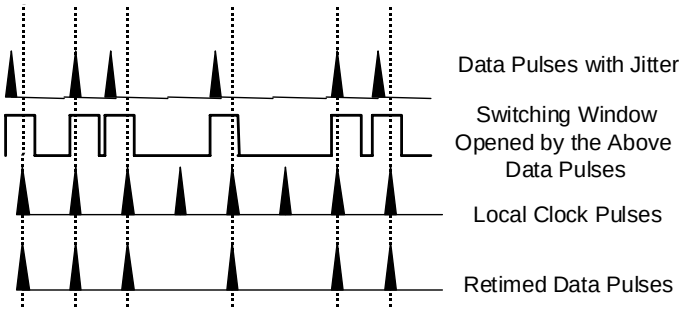

Fig. 2. All-optical 3R regeneration

3. Experimental Setup

Figure 3 shows our experimental setup to characterize the 3R regenerator. The 84-Gbps pseudorandom data pulses were generated with an actively-mode-locked fiber laser (Pritel, Inc.), an EO modulator, and a multiplexer. The word length of the pseudorandom data pattern was set to 2^{31}-1 (at 10 GHz). Relatively long delay fibers (5-20 m) were used in the multiplexer, for decorrelating the pseudorandom data patterns. The 84-GHz clock pulses were generated with another actively-mode-locked fiber laser and a multiplexer. The pulse widths of the data and clock pulses were 2.1 ps and 2.8 ps, respectively. The powers of the data and clock pulses into the SOA chip inside the regenerator were set to –4 dBm (9 fJ/pulse) and +2 dBm, respectively. For measuring the error rate of the regenerated 84-Gbps pulses, a hybrid-integrated SMZ all-optical demultiplexer in Fig. 1(b) [4] and a 10-GHz detection system were used.

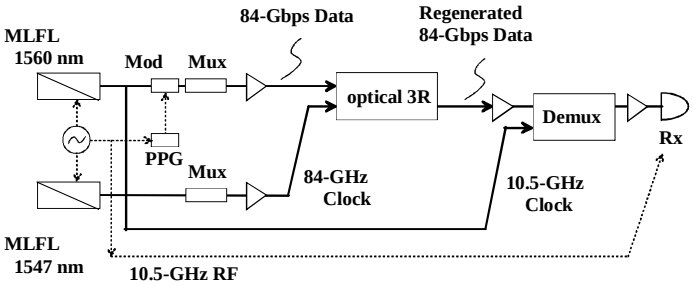

Fig. 3. Experimental setup

4. Results

Figure 4(a) shows the regenerated 84-Gbps waveforms observed with a synchronous streak camera. As seen in the inset, the typical extinction ratio of the regenerated pulses was larger than 17 dB. As shown in Fig. 4(b), clear eye opening of the 10.5-Gbps waveform was observed with a 30-GHz sampling scope after the all-optical demultiplication.

Figure 5(a) shows the error rate of the regenerated-and-demultiplexed 10.5-Gbps data pulses as a function of the delay time for the 84-Gbps data pulses with respect to the 84-GHz clock pulses. A timing jitter of +/- 1 ps (+/- 8% of the 84-GHz time frame) increases the error rate by a factor of only 10. This jitter-tolerent performance will be improved by optimizing the switch window shape.

Finally, the solid curve in Fig.5(b) shows the bit error rate for the regenerated-and-demultiplexed 10.5-Gbps data pulses as a function of the optical power received by an Er-doped fiber preamplifier in front of the 10-GHz optical receiver. The dashed curve shows the error rate for 10.5-Gbps data pulses directly demultiplexed

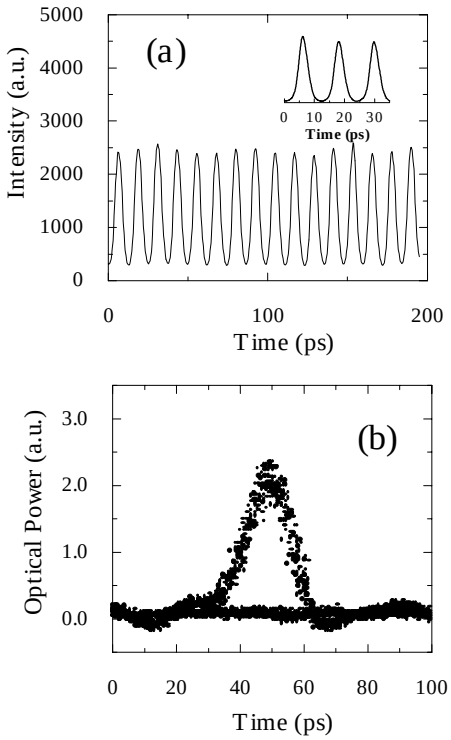

Fig. 4. Regenerated data waveforms

from the 84-Gbps data pulses without regeneration, for comparison (the dotted curve shows the baseline error rates of the 10-GHz detection system). As shown in the figure, the power penalty of the 3R regeneration alone was negligibly small down to an error rate of 10^{-11}. These results indicated that the optical signal-to-noise ratio of the 84-Gbps data pulses regenerated by our regenerator was as high as those of the input 84-GHz clock pulses.

5. Conclusion

We have achieved penalty-free data pulse regeneration at 84 Gbps, for the first time, down to an error rate level of 10^{-11} with using pseudorandom data pattern length of 2^{31}-1. An all-optical 3R regenerator having a PD-SMZ structure was used. The input data pulse power to the regenerator was as low as –4 dBm (9 fJ/pulse).

Acknowledgement:

Part of this work was performed under the management of the Femtosecond Technology Research Association supported by the New Energy and Industrial Technology Development Organization.

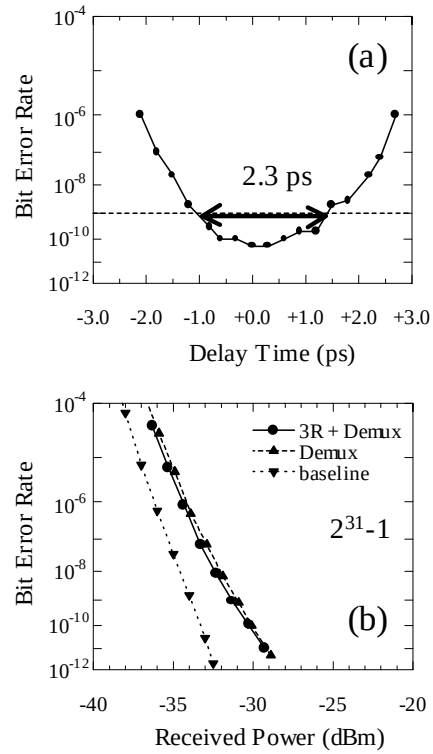

Fig. 5. Error rates of regenerated pulses

References:

[1] K. Tajima, Jpn. J. Appl. Phys. **32**, L1746-L1749 (1993).

[2] K. Tajima, S. Nakamura, and Y. Sugimoto, Appl. Phys. Lett. **67**, 3709-3711 (1995).

[3] S. Nakamura, Y. Ueno, and K. Tajima, IEEE Photonics Technol. Lett. **10**, 1575-1577 (1998).

[4] S. Nakamura, Y. Ueno, K. Tajima, J. Sasaki, T. Sugimoto, T. Kato, T. Shimoda, M. Itoh, H. Hatakeyama, T. Tamanuki, and T. Sasaki, IEEE Photonics Technol. Lett. **12**, 425-427 (2000).

[5] Y. Ueno, S. Nakamura, K. Tajima, and S. Kitamura, IEEE Photonics Technol. Lett. **10**, 346-348 (1998).

[6] Y. Ueno, S. Nakamura, and K. Tajima, Jpn. J. Appl. Phys. **39**, L806-808 (2000).

[7] Y. Ueno, S. Nakamura, H. Hatakeyama, T. Tamanuki, T. Sasaki, and K. Tajima, European Conference on Optical Communication (ECOC 2000), Munich, Germany, pp. 13-15.

[8] S. Nakamura, Y. Ueno, and K. Tajima, Optical Amplifiers and their Applications (OAA 2000), Quebec, Canada, PD4-1.

[9] L. Billes, J. C. Simon, B. Kowalski, M. Henry, G. Michaud, P. Lamouler, and F. Alard, European Conference on Optical Communication (ECOC '97), Edinburgh, Scotland, 269-272.

[10] A.E. Kelly, I.D. Phillips, R.J. Manning, A.D. Ellis, D. Nesset, D.G. Moodie, and R. Kashyap, Electron. Lett. **35**, 1477-1478 (1999).